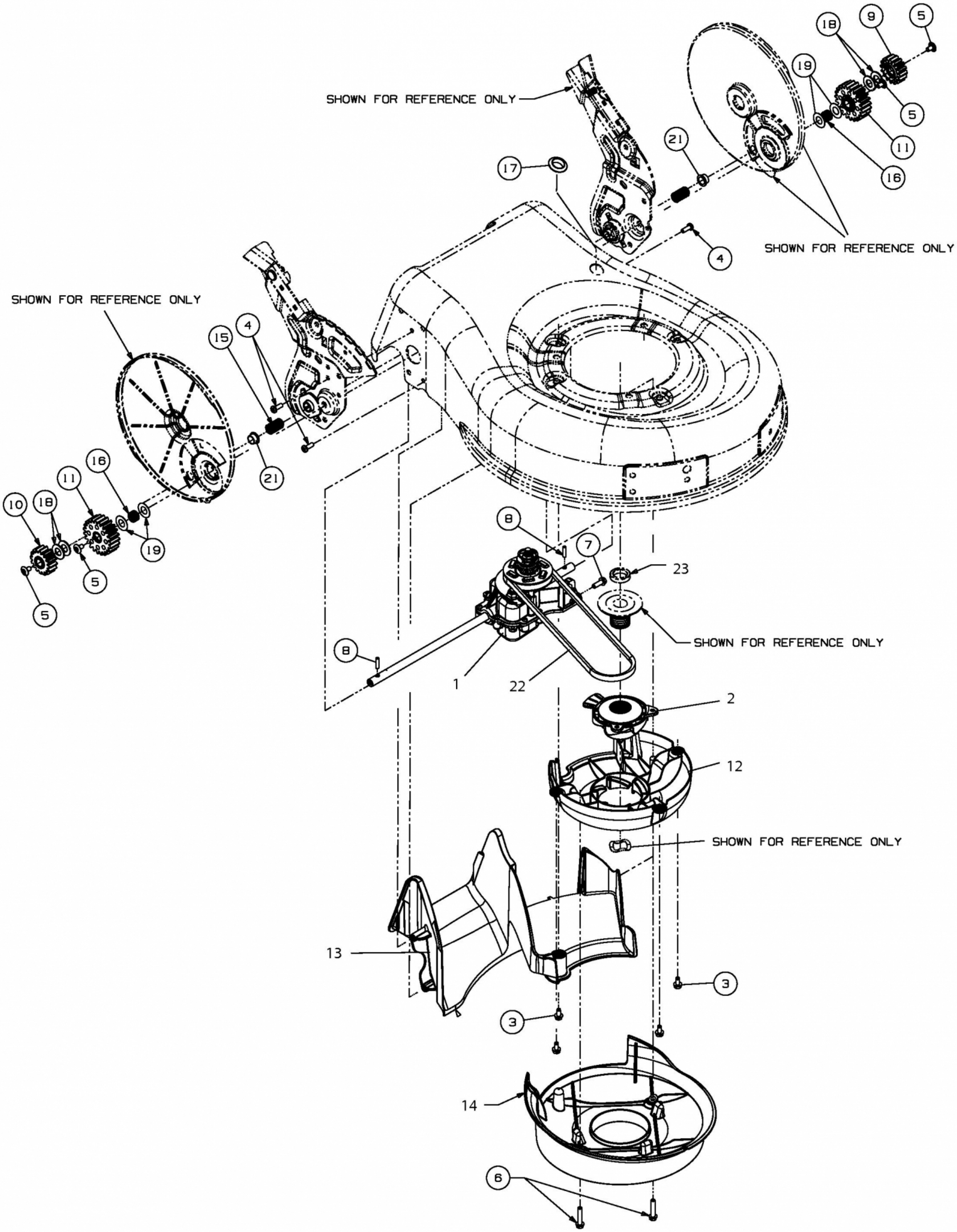
SHOWN FOR REFERENCE ONLY
SHOWN FOR REFERENCE ONLY
SHOWN FOR REFERENCE ONLY
SHOWN FOR REFERENCE ONLY
SHOWN FOR REFERENCE ONLY
SHOWN FOR REFERENCE ONLY
1
2
3
3
4
4
5
5
5
6
7
8
8
9
10
11
11
12
13
14
15
16
16
17
18
18
19
19
21
21
22
23

E3-05534A-01